6W 38º GU10 Glass LED Bulb SAMSUNG Chip 660Lm

Product codes:

Reference: GU10-ND6W



Product features:

Power (W): 6
Power source (V): 220-240V
Color temperature CCT: 4000K
Color temperature CCT: 5700K
Color temperature CCT: 3000K
LED: SMD2835
LED chip brand: SAMSUNG
Lampholder: GU10
Luminous efficacy (Lm/W): 110
Brightness (Lm): 660
IP: IP20
Luminous angle: 38º
Frequency (Hz): 50-60Hz
Measures (mm): Ø50x54mm
Material: Glass
Operating temperature: -20ºC ~ +55ºC
Energy efficiency 2021: A+
Lifespan: 50.000h
Certification: CE - RoHS
Warranty: 5 años

Product attributes:

Color temperature CCT (ºK): Warm white 3000K, Natural white 4000K, Cool white 5700K

Product description:

SAMSUNG glass GU10 spot, 3 temperatures, 230V connection GU10 LED Bulb 6W SAMSUNG Chip 38º Glass 660 lm CCT

The with a SAMSUNG SMD2835 chip (110 lm/W) delivers with a 38º beam and CRI > 82. In glass, available in , Ø50x54 mm, direct 230V connection, ideal for recessed spots.

? 6W? 660 lm? 38º? CCT

6W
Power660 lm
Luminous flux38º
BeamGU10
Base

The **6W GU10 LED spot bulb**, fitted with the SAMSUNG SMD2835 chip (110 lm/W efficiency), generates a luminous flux of 660 lumens with a 38º beam angle, for concentrated light ideal in accent lighting. It connects directly to 230V, with no transformer, and offers a CRI > 82 for vivid, natural colours.

Available in **warm, neutral and cool white**, it suits every atmosphere. Made of **glass**, it is sturdy and durable, with compact Ø50x54 mm dimensions that make it perfect for many applications, especially recessed spots. It is an efficient replacement for halogens, with notable energy savings.

Why choose this product? **? 38º beam, SAMSUNG**
660 concentrated lm, ideal for accenting. **? 3 temperatures**
Warm, neutral or cool white to suit the atmosphere. **? Glass, CRI > 82**
Direct 230V connection, GU10 base. Available light shades

Available in three selectable colour temperatures, to match the atmosphere of each space:

3000 K
Warm white4000 K
Neutral white6000 K
Cool white Technical specifications Product typeGU10 LED spot bulbPower6WLuminous flux660 lmLED chipSAMSUNG SMD2835 (110 lm/W)Beam angle38ºCRI> 82Colour temperatureWarm / neutral / cool whiteMaterialGlassBaseGU10DimensionsØ50x54 mmPower230V (no transformer) Advantages

- **38º beam:** concentrated light, accenting.
- **SAMSUNG chip:** 660 lm, 110 lm/W.
- **3 temperatures:** warm, neutral or cool.
- **CRI > 82:** vivid, natural colours.
- **Glass, GU10 base:** direct 230V connection.
- **Ø50x54 mm:** recessed spots.

Recommended applications ?**Recessed spots** — accent lighting.?**Shops and windows** — product highlighting.?**Living rooms and bedrooms** — focused light.?**Galleries and hotels** — faithful colour rendering. Installation guide 1**Switch off the power**
Cut the supply before working.2**Choose the temperature**
Select warm, neutral or cool white.3**Fit the GU10 bulb**
Place the bulb in the GU10 socket (direct 230V).4**Check**
Restore power and check the lighting. Frequently asked questions **What is the beam angle?**
38º, for concentrated accent light. **Which temperatures are available?**
Warm, neutral and cool white. **Is a transformer needed?**
No, it connects directly at 230V (GU10 base). ?

6W
660 lm?

38º
SAMSUNG?

CCT
CRI > 82?

GU10
230V

Product gallery:


CRI<70
Ra
Chromatic Reproduction Index
Farbwiedergabeindex
Indice de Reproducción Cromatica
Rendu des Couleurs
Indice de rendu des couleurs
Indice di resa cromatica
provided by
SAMSUNG
CRI
>80

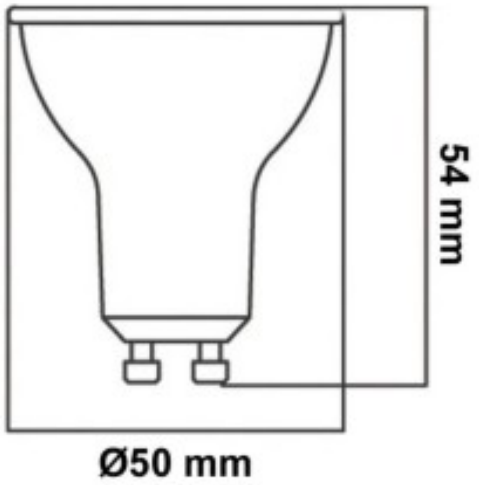
54 mm
Ø50 mm