Ultra-Slim 360º Surface-Mounted White Motion Sensor

Product codes:

Reference: CR-CR3M00-00



Product features:

Power (W): 300
Power source (V): 220-240V
Luminous angle: 360º
Frequency (Hz): 50-60Hz
Measures (mm): Ø115x24mm
Material: Thermoplastic
Operating temperature: -20ºC ~ +55ºC
Lifespan: 30.000h
Certification: CE - RoHS
Warranty: 3 años

Product attributes:

Product description:

Slim presence detector Slim Surface Motion Sensor 360º IP20 White

An with a modern, compact design. With 360º coverage, a 6-metre range and time and sensitivity settings, it automates indoor lighting discreetly.

? 360º? 6 m? IP20? Slim white

360º
Coverage6 m
DetectionIP20
ProtectionSlim

Design

The **ultra-slim surface motion sensor** is an ideal solution for automating the switching of indoor luminaires, with a modern, compact design that suits any environment. Fitted with **infrared detection technology**, it efficiently controls lighting in corridors, stairs, bathrooms and other spaces needing automatic switching.

It lets you set the **on-time**, from a minimum of **10 seconds** to a maximum of **15 minutes**, as well as the **light sensitivity** via its built-in dusk sensor. Its **360º detection angle** and **6-metre maximum range** ensure total coverage of the desired area, all in an ultra-slim white surface housing.

Why choose this product? **? 360º coverage**

Detection over 6 metres for reliable automatic switching. **? Ultra-slim design**

Compact white housing that integrates discreetly. **? Adjustable 10 s - 15 min**
Adjustable on-time and light sensitivity. Technical specifications Product typeUltra-slim surface motion sensorCoverage angle360ºDetection range6 mTimer10 s to 15 minLight sensitivityAdjustable (dusk sensor)Sensor typeInfraredColourWhiteMountingSurfaceProtectionIP20 (indoor) Advantages

- **360º coverage:** detection over 6 metres.
- **Ultra-slim design:** discreet ceiling integration.
- **Adjustable 10 s - 15 min:** on-time to suit you.
- **Dusk sensor:** switching based on ambient light.
- **Infrared detection:** reliable and precise.
- **Energy savings:** lighting only when needed.

Recommended applications ?**Corridors and stairs** — automatic switching on passage.?**Bathrooms** — convenience and savings.?**Halls and entrances** — presence detection.?**Offices** — lighting on demand. Installation guide 1**Switch off the power**
Cut the supply before installation.2**Surface-mount**
Fix the sensor to the ceiling on the surface.3**Make the connection**
Wire the input and output as per electrical regulations.4**Set the parameters**

Adjust the time (10 s - 15 min) and light sensitivity, then test. Frequently asked questions **What is its detection range?**

Up to 6 metres, with a 360º angle. **Can the on-time be adjusted?**

Yes, from 10 seconds to 15 minutes. **Is it suitable for outdoors?**
No, its IP20 rating means it is for indoor use. ?

360º
6 m?

Slim
Discreet?

10 s-15 min
Adjustable?

In stock
Fast shipping

Product gallery:

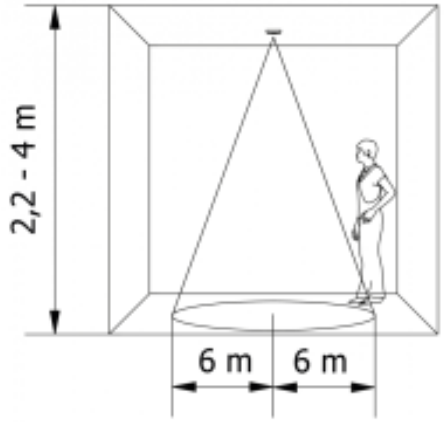
2,2 - 4 m
6 m
6 m

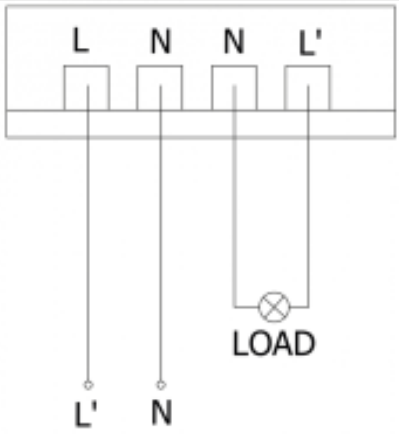
L
N
N
L'
LOAD
L'
N