WHITE CORNICE 17x43mm Aluminium profileee for LED Strips - 2 meters

Product codes:

Reference: IL-2836-W

Product features:

Colour: White
IP: IP20
Measures (mm): 17x43x2000mm
Material: Aluminum + PC
Certification: CE - RoHS
Warranty: 3 años



Product attributes:

Product description:

Aluminum Profile WHITE CORNICE for LED Strips

The aluminum profileee model CORNICE is the ideal solution for installing LED strips, providing high-quality lighting and an impeccable aesthetic finish.

This profileee, designed to be a wall washer, comes in an elegant white color and has dimensions of 17x43x2000mm, allowing the installation of an IP20 LED strip. Thanks to its innovative design, it is easily mounted on walls using the supplied metal clips that use a click system. Additionally, it includes screw-on end caps, ensuring a perfect finish.

The CORNICE profileee is highly versatile, as it can be cut to the exact size required for each installation. It can also be

miter cut, allowing for precise and professional corners or angles. With the CORNICE profileee, you can transform any space with efficient and aesthetically pleasing LED lighting.

Why choose this product? **Heat Dissipation**
Aluminum profileees help dissipate the heat generated by LED strips, prolonging their lifespan and maintaining optimal performance. **Protection**

They provide additional protection for LED strips against dust, moisture, and impacts. **Aesthetic**
They offer a clean and professional finish, enhancing the overall appearance of the installation. Technical specifications ModelCORNICEColorWhiteDimensions17x43x2000mmCompatibilityIP20 LED stripsMaterialAluminumMountingOn walls using metal clips with a click systemIncluded AccessoriesMetal clips, screw-on end capsCustom CutCan be cut to size and mitered Recommended applications ?Wall Lighting: Perfect for creating lighting effects on walls, providing uniform and soft light.?Interior Design Projects: Ideal for use in homes, offices, stores, and restaurants, adding a modern and elegant touch.?Hallway and Staircase Lighting: Improves visibility and safety in passage areas.?Commercial Space Decoration: Provides a sophisticated look to shop windows, displays, and exhibition areas.?Residential Applications: Perfect for living rooms, bedrooms, and kitchens, creating cozy and well-lit environments. Advantages

- ? Heat Dissipation: Aluminum profileees help dissipate the heat generated by LED strips, prolonging their lifespan and maintaining optimal performance.
- ? Protection: They provide additional protection for LED strips against dust, moisture, and impacts.
- ? Aesthetic: They offer a clean and professional finish, enhancing the overall appearance of the installation.
- ? Versatility: They can be cut to size and mitered, allowing for customized and adaptable installations in any space.
- ? Ease of Installation: The mounting system with metal clips and the click design facilitate quick and secure installation.

Installation guide 1Preparation of the Installation Area: Ensure that the wall surface is clean and free of dust.2Mark the position where the profileee will be installed using a level to ensure correct alignment.3Cutting the Profile: If necessary, cut the profileee to the required size using a saw suitable for metal.4For corners or angles, miter cut the profileee as needed.5Installing the Metal Clips: Place the metal clips on the wall at the marked position.6Use appropriate screws to securely fix the clips.7Mounting the Profile: Insert the LED strip into the profileee, ensuring it is well positioned.8Place the profileee onto the metal clips and press until you hear a "click" indicating it is securely fixed.9Installing the End Caps: Screw the end caps onto the ends of the profileee for a clean and professional finish. ?

Certified product
CE?

In stock
Fast shipping

Product gallery:





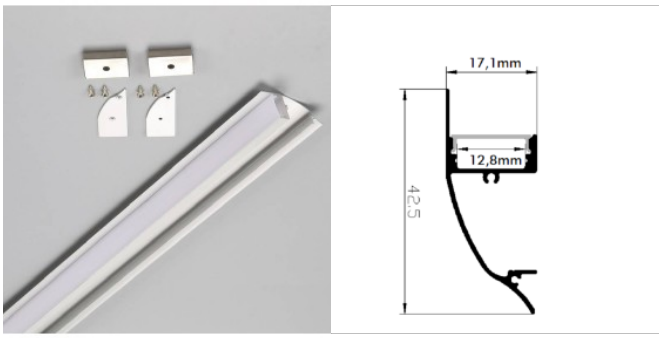
17,1mm
12,8mm
42,5

