Surface-Mounted 48V Black Magnetic Track 2 Meters

Product codes:

Reference: PL-CMS2M

Product features:

Power source (V): 48V
Colour: Black
IP: IP20
Measures (mm): 50x27x2000mm
Material: Aluminum + PC
Operating temperature: -20ºC ~ +40ºC
Certification: CE - RoHS
Warranty: 3 años



Product attributes:

Colour: Black

Product description:

48V surface magnetic track, modular, 2 m Surface Magnetic Track 48V 2 metres Black Aluminium for LED Lighting

The is an innovative, versatile solution for LED lighting systems. In high-quality reinforced aluminium, black finish, it holds repositionable magnetic spots and modules, for modular, modern lighting.

? 48V? 2 m? Magnétique? Noir

48V

Voltage2 m
LengthMagnetic
SystemAluminium
Material

The **2-metre surface magnetic track** is an innovative, versatile solution for installing **48V low-voltage** LED lighting systems. Made of high-quality reinforced aluminium and available in black, this track ensures great sturdiness and an elegant finish.

It lets you install **magnetic spots, projectors and linear modules** that attach and reposition freely along the whole length of the track, without tools. It is the ideal base for creating modular, scalable lighting in living rooms, kitchens, shops, showrooms and offices. Surface mounting; several tracks can be linked with the dedicated connectors.

Why choose this product? **? 48V magnetic system**

Repositionable spots and modules without tools. **? Black reinforced aluminium**

Sturdy, elegant finish, surface mounting. **? 2 m, linkable**
Several tracks joined with the dedicated connectors. Technical specifications Product typeSurface magnetic LED trackVoltage48V (low voltage)Length2 metresMaterialReinforced aluminiumColourBlackMountingSurfaceCompatibility48V magnetic spots and modulesUseIndoor Advantages

- **48V magnetic system:** modular.
- **Repositionable:** without tools.
- **Black reinforced aluminium:** sturdy.
- **2 m:** linkable with connectors.
- **Surface mounting:** modern.
- **Living rooms and shops:** scalable lighting.

Recommended applications ?**Living rooms and kitchens** — modular lighting.?**Shops and showrooms** — repositionable spots.?**Offices** — scalable 48V system.?**Halls and galleries** — modern design. Installation guide 1**Switch off the power**
Cut the supply before installation.2**Fix the track**
Surface-mount the magnetic track on the ceiling or wall.3**Wire the 48V supply**
Connect the supply and, if needed, other tracks.4**Place the modules**

Magnetically clip the spots and modules. Frequently asked questions **What is its voltage?**

48V low voltage, for compatible magnetic modules. **Can several tracks be linked?**

Yes, with the dedicated connectors and joints. **How are the spots mounted?**
Magnetically, repositionable without tools. ?

48V
2 m?

Aluminium
Black?

Surface
Magnetic?

In stock
Fast shipping

Product gallery:



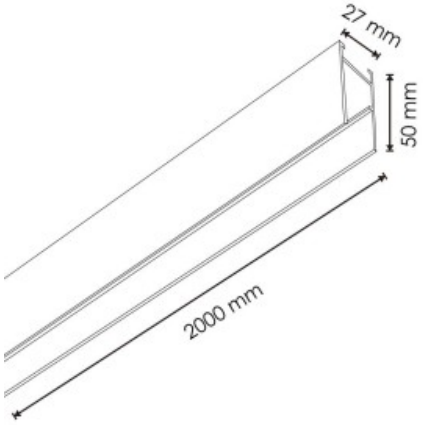
27 mm
50 mm
2000 mm

