Grey Garden Spotlight for GU10 LED Bulb with Spike

Product codes:

Reference: OS-DIEGOGU10-80



Product features:

Lampholder: GU10
Colour: Grey
IP: IP65
IK: IK06
Measures (mm): 98x320mm
Material: Aluminum + glass
Certification: CE - RoHS
Warranty: 3 años

Product attributes:

Product description:

Grey garden spot with stake, GU10 included, IP65 DIEGO Garden Spot grey with Stake GU10 5W 3000K IP65 Bulb Included

The with stake is an elegant solution for lighting outdoor spaces. -rated, water- and dust-resistant, it holds a . Ø98x320 mm, installation via a stake planted in the ground.

? GU10? 5W? IP65? Piquet

GU10

Socket5W
Bulb included3000K
Warm whiteIP65
Protection

The **grey DIEGO garden spot** with a stake for GU10 LED bulbs is an elegant, functional solution for lighting outdoor spaces. With an **IP65** rating, it resists water and dust, making it perfect for use in gardens, flowerbeds, lawns and borders.

It comes with a **GU10 5W 3000K bulb included**, ready to use, and plants easily into the ground thanks to its **stake**, with no work needed. Its grey finish body and Ø98x320 mm dimensions make it a discreet, decorative spotlight, ideal for highlighting plants, trees and garden features.

Why choose this product? **? GU10 5W included**

3000K bulb supplied, ready to use. **? IP65, outdoor**

Water- and dust-resistant, gardens and lawns. **? Grey stake**
Work-free installation, highlights plants and trees. Technical specifications Product typeDIEGO garden spot with stakeSocketGU10 (bulb included)BulbGU10 5W 3000K LED (included)ColourgreyInstallationStake (planted in the ground)DimensionsØ98x320 mmProtectionIP65UseOutdoor (gardens, lawns) Advantages

- **GU10 5W bulb included:** 3000K, ready to use.
- **IP65:** water and dust.
- **Stake:** work-free installation.
- **Grey finish:** discreet design.
- **Ø98x320 mm:** decorative spotlight.
- **Gardens and lawns:** highlights plants and trees.

Recommended applications ?**Gardens and flowerbeds** — plant highlighting.?**Lawns and borders** — planted stake.?**Trees and shrubs** — accent lighting.?**Paths and terraces** — IP65 outdoor. Installation guide 1**Plant the stake**
Plant the stake in the ground, lawn or a border.2**Aim the spot**
Aim the beam at the plant or feature to light.3**Wire it**
Wire it to the mains (the GU10 5W bulb is included).4**Check**

Check the lighting and the IP65 sealing. Frequently asked questions **Is the bulb included?**

Yes, a GU10 5W 3000K LED bulb is included. **Is it suitable for outdoors?**

Yes, its IP65 rating resists water and dust. **How is it installed?**
By a stake planted in the ground, no work needed. ?

GU10 5W
Included?

IP65
3000K?

Stake
grey?

In stock
Fast shipping

Product gallery:













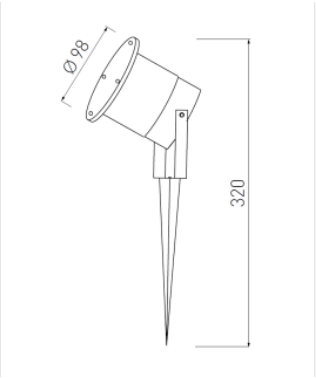
Ø 98
320