Ceiling Light AVEIRO DUO rond blanc

Product codes:

Reference: OS-AV80160OK2-10

Product features:

Lampholder: GU10
Colour: White
IP: IP20
IK: IK06
Measures (mm): 80x160x85mm
Material: Aluminum
Certification: CE - RoHS
Warranty: 5 años



Product attributes:

Product description:

AVEIRO DUO round white ceiling light, 2xGU10 adjustable AVEIRO DUO Round white Aluminium Ceiling Light 2xGU10 Adjustable Surface

The in white lacquered aluminium holds , independently adjustable. All mounting accessories included, bulb fitted from the front, surface mounting. Dimensions 80x160x85 mm.

? 2xGU10? Blanc? Orientable? 80x160x85 mm

2xGU10

Socketwhite
Colourround
ShapeAdjustable
Spot

The **AVEIRO DUO round ceiling light**, in white lacquered aluminium, holds **2 bulbs 2xGU10 LED**, independently adjustable, to direct the light exactly where you want. Its refined design fits perfectly into any interior style.

It includes all the accessories needed for mounting, and the **GU10** LED bulb (not included) is easily fitted from the front. It lets you install adjustable LED lighting in living rooms, corridors, bedrooms and shops, surface-mounted. Dimensions 80x160x85 mm.

Why choose this product? **? 2x GU10 independently adjustable**
LED bulb (not included), directable light. **? White lacquered aluminium**
Round shape, refined design, all styles. **? Surface mounting**
Accessories included, bulb from the front. Technical specifications Product typeAVEIRO DUO round ceiling lightSocket2x GU10 (bulb not included)OrientationIndependently adjustableMaterialLacquered aluminiumColourwhiteMountingSurface (bulb from the front)Dimensions80x160x85 mmUseIndoor Advantages

- **2x GU10:** independently adjustable.
- **White lacquered aluminium:** round shape.
- **Surface mounting:** accessories included.
- **Bulb from the front:** easy maintenance.
- **Directable light:** accent lighting.
- **80x160x85 mm:** refined design.

Recommended applications ?**Living rooms and corridors** — adjustable lighting.?**Bedrooms** — GU10 spots.?**Shops and hotels** — refined design.?**Non-recessable ceilings** — surface mounting. Installation guide 1**Switch off the power**
Cut the supply before installation.2**Fix to the ceiling**
Surface-mount the AVEIRO ceiling light (accessories included).3**Install 2 bulbs GU10**
Fit 2 bulbs GU10 from the front (not included).4**Aim and check**
Aim the spot(s) and check the lighting. Frequently asked questions **Are the bulbs included?**
No, it holds 2 bulbs GU10 LED (not included). **Are the spots adjustable?**
Yes, independently adjustable. **Does it need recessing?**
No, it surface-mounts, bulb from the front. ?

2xGU10
Round?

white
Alu?

Adjustable
80x160x85 mm?

In stock
Fast shipping

Product gallery:

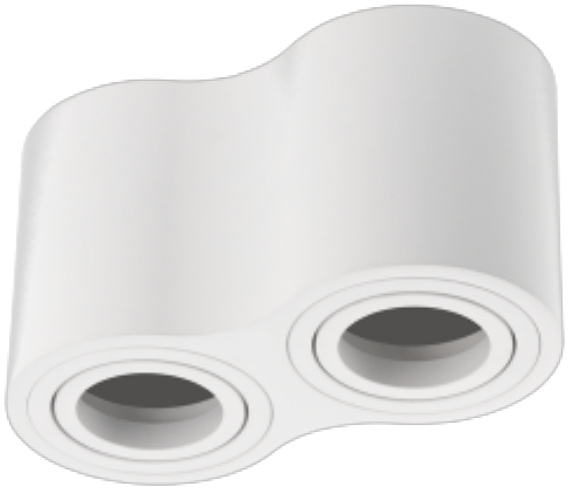

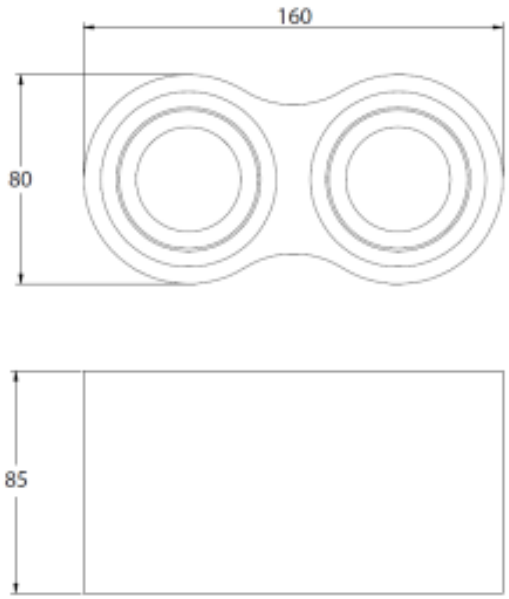
160
80
85